# Overdose and Emergency Detection System

Jenovia Mistry

April 2025

**Technical Design Documentation**

Figure 0.0.1: Damien Center Rendering of New Headquarters

# Contents


**1 Introduction** **3**
1.1 Executive Description . . . 3
1.2 User Story . . . 3
1.3 Engineering Design Process . . . 3

**2 Design Requirements** **4**
2.1 Requirements . . . 4
2.1.1 Always Protect Privacy of Users . . . 4
2.1.2 Interpret Emergency State Logic from Sensor Data . . . 4
2.1.3 Alert Staff Quickly / Discreetly . . . 4
2.1.4 Alert Staff Precisely and Accurately . . . 4
2.2 Design Constraints and Specifications . . . 5

**3 System Overview** **6**
3.1 System Activity Diagram . . . 6
3.2 My Contribution: Door Sensor Subsystem . . . 7
3.3 System Photographs . . . 8

**4 Subsystems** **9**
4.1 Door Sensor . . . 9
4.1.1 Subsystem Diagrams . . . 9
4.1.2 Specifications . . . 11
4.1.3 Subsystem Interactions . . . 12
4.1.4 Schematics . . . 14
4.1.5 Parts . . . 20
4.1.6 Algorithm . . . 21
4.1.7 Theory of Operation . . . 23
4.1.8 Specifications Measurement . . . 25

**5 Bibliography** **36**

**6 Appendices** **38**
6.1 Appendix A: Existing Plans . . . 38

# 1 Introduction

## 1.1 Executive Description

The Overdose and Emergency Detection system is a wireless alert platform for single-occupancy bathrooms at harm reduction facilities. A compact wall-mounted unit monitors each bathroom using a PIR motion sensor and a magnetic reed switch. The system interprets prolonged occupancy with no motion as a potential overdose or fall. When this occurs, it transmits a LoRa wireless alert to a staff pager tagged with a unique bathroom ID so staff know exactly where to respond. The system is designed to be fast, private, and non-intrusive: no cameras, no microphones, no compromise of dignity.

## 1.2 User Story

Daniel is the manager of a harm reduction facility. His patients have access to private single-occupancy bathrooms, but behind closed doors, emergencies can go unnoticed. Daniel needs a system that can automatically alert him and his staff via their pagers if someone inside hasn't come out, without cameras, microphones, or any compromise of privacy or dignity.

## 1.3 Engineering Design Process

We identified system requirements through direct conversations with Damien Center staff, focusing on the challenge of monitoring single-occupancy bathrooms without any compromise of user privacy. From those conversations, three constraints shaped every decision: no cameras or microphones, reliable wireless communication through walls and across floors, and a form factor small enough to install without wall damage. We chose LoRa at 915 MHz for its wall penetration and infrastructure independence. Subsystems were developed and validated independently using oscilloscopes and UART debug logs before integration. Every design tradeoff (component cost, power consumption, alert latency) was weighed against real operational needs at the facility.

# 2 Design Requirements

## 2.1 Requirements

### 2.1.1 Always Protect Privacy of Users

1. The system must not violate any state or federal privacy laws.
2. The system must not utilize cameras or microphones.

### 2.1.2 Interpret Emergency State Logic from Sensor Data

1. The Microcontroller must identify an 'emergency' or 'no emergency' state using environment data collected by the motion sensor and door sensor.

### 2.1.3 Alert Staff Quickly / Discreetly

1. Achieve an emergency-to-staff alert time of 1-2 minutes, no more than 4 minutes in a worst-case scenario only.
2. The patient may manually trigger an instant alert with the emergency button.
3. The alert must reach the appropriate staff using pagers.
4. Do not draw unnecessary attention to the emergency.

### 2.1.4 Alert Staff Precisely and Accurately

1. To maintain urgency and trust, alerts must only be sent in confirmed emergencies and include the correct bathroom ID.
2. The system triggers an alert only after a false positive check fails.
3. If the user presses the Alert Reset button within 15 seconds of the emergency being detected, the alert is canceled (false positive check).
4. Each alert message must include a unique bathroom ID so that the staff can respond to the correct location.

## 2.2 Design Constraints and Specifications

1. **Power:**
   Constraint: The system must be battery-powered and operate for extended periods without frequent charging.
   Specification: I selected the STM32F091 and RFM95W for their low-power profiles and configured sleep modes for idle periods to extend battery life.

2. **Wireless Communication Range:**
   Constraint: The system must reliably transmit alerts throughout the Damien Center's 56,000 sq. ft. facility, including through walls and across floors.
   Specification: I chose the RFM95W LoRa module operating at 915 MHz for its wall-penetration characteristics and tested preamble settings and latency to verify reliable coverage at the required range.

3. **Sensor Integration and Placement:**
   Constraint: The door sensor must detect the open or closed state of the bathroom door without violating user privacy.
   Specification: I used a magnetic reed switch and magnet pair mounted on the door and frame, requiring no cameras, microphones, or active user interaction.

4. **Form Factor and Mounting:**
   Constraint: Hardware must fit within confined bathroom spaces and install without wall damage.
   Specification: The enclosure is small and wall-mounted, designed for adhesive or non-destructive installation to accommodate the Damien Center's existing bathrooms.

# 3 System Overview

## 3.1 System Activity Diagram

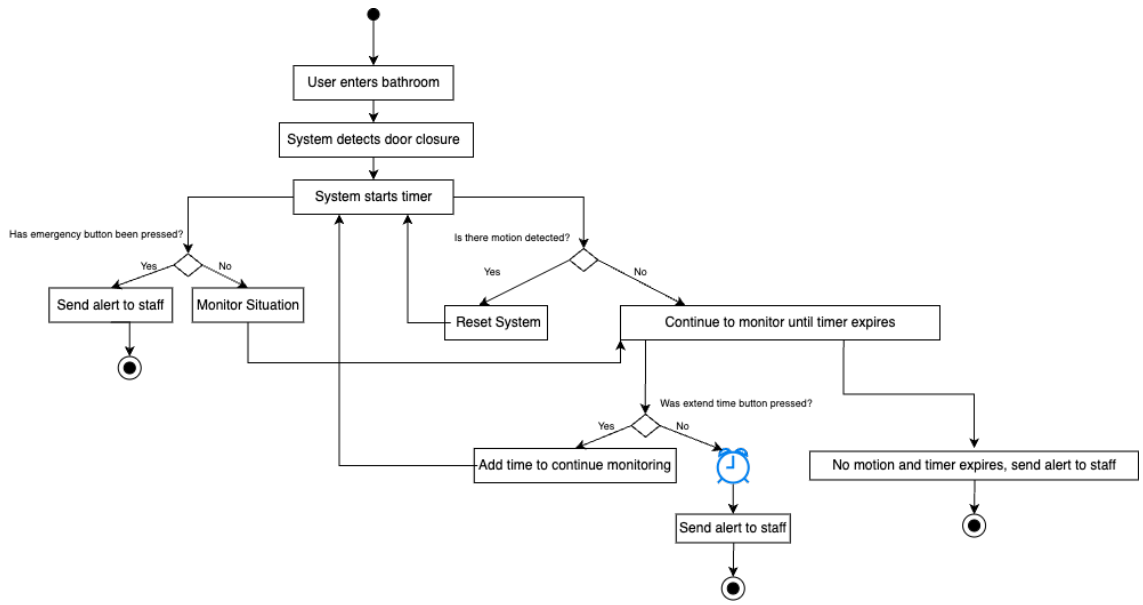


Figure 3.1.1: System Activity Diagram

### 3.2 My Contribution: Door Sensor Subsystem

This document covers my individual contribution to a four-person capstone project. The full system included an emergency monitoring subsystem, main microcontroller, and staff pager built by teammates. My subsystem is the door sensor. I owned the hardware design, PCB layout, and specification validation. The RF communication pipeline was a collaboration between my teammate and me.

The door sensor subsystem monitors the open and closed state of each bathroom door using a reed switch and magnet pair. When a state change is detected, the STM32F091 microcontroller reads the GPIO level, applies a 50 ms software debounce, constructs a structured RF packet containing the bathroom ID and current door state, and transmits it wirelessly at 915 MHz via the RFM95W LoRa module. The main microcontroller receives this transmission and uses it alongside PIR motion data to determine whether an emergency is occurring. If no acknowledgment is received, the firmware retransmits up to three times to ensure reliability.

The subsystem is battery-powered with a 3.7V 18650 Li-Ion cell, regulated to 3.3V by a Pololu S7V8F3 step-up/step-down regulator, and includes a TP4056 charging module that allows the system to remain operational while charging. The microcontroller also monitors battery voltage and transmits a low-battery warning to the main system before an unexpected shutdown can occur.

### 3.3 System Photographs

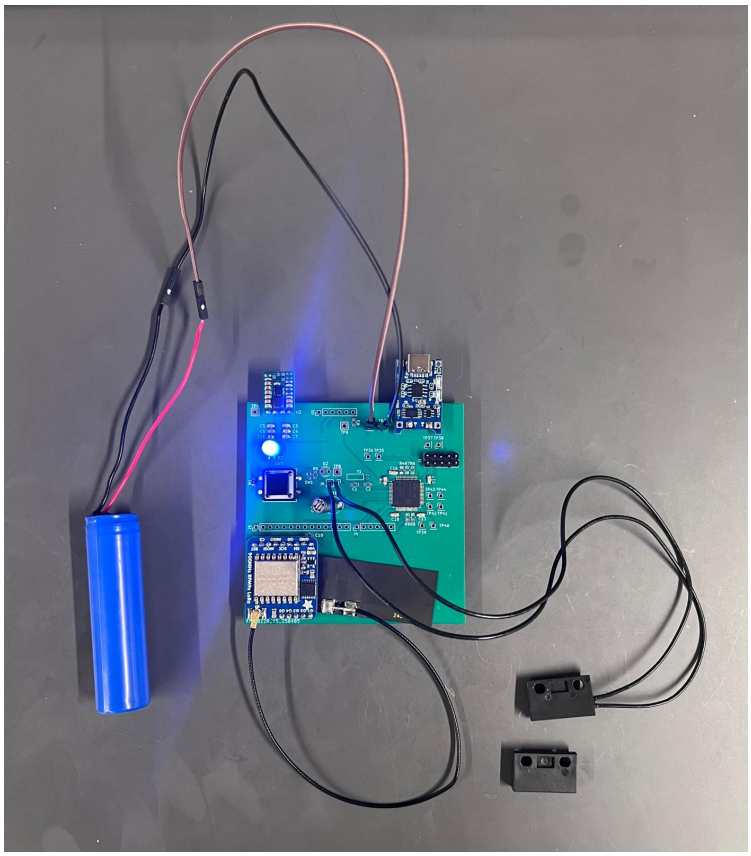

Figure 3.3.1: Photograph of the final assembled and validated door sensor subsystem, showing the custom PCB with the STM32 microcontroller, Adafruit RFM95W LoRa transceiver module with antenna, Littelfuse reed switch interface, and attached 18650 Li-Ion battery providing power. This subsystem is responsible for detecting door state changes and wirelessly transmitting structured packets. The configuration shown fully matches the final operational system used for specification validation.

# 4 Subsystems

## 4.1 Door Sensor

### 4.1.1 Subsystem Diagrams

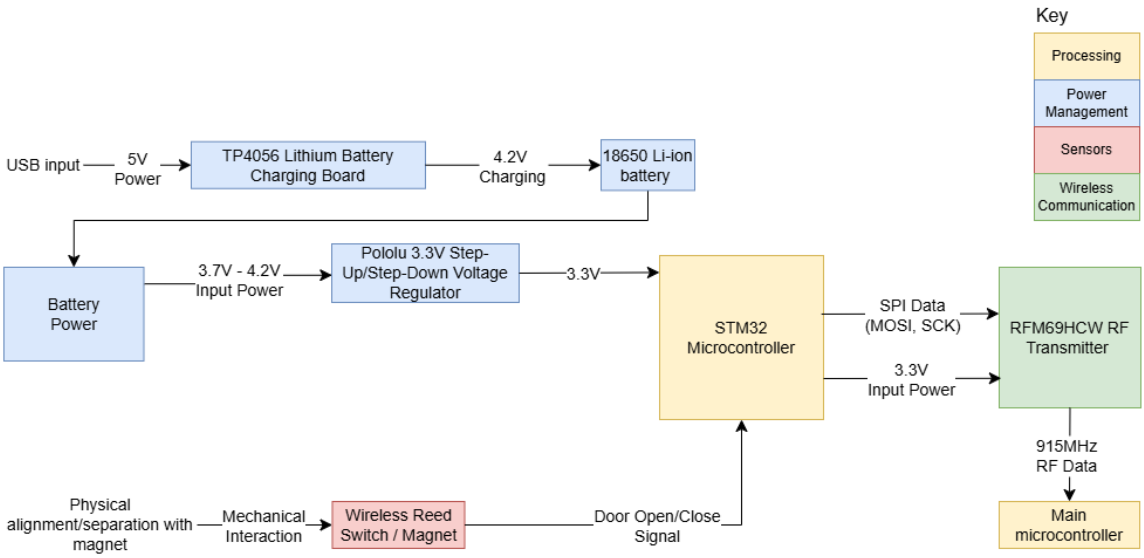


Figure 4.1.1: Subsystem Block Diagram

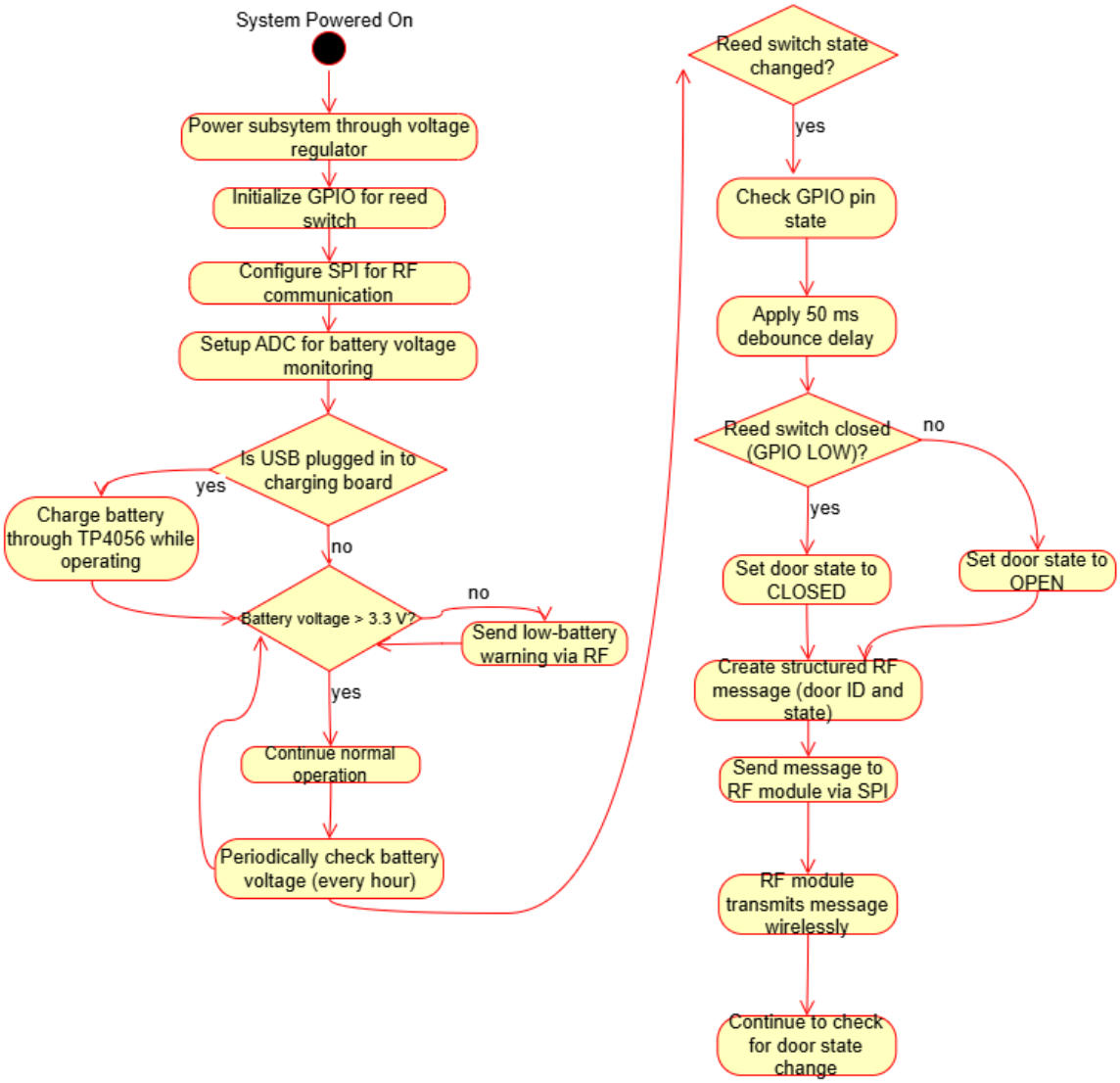


Figure 4.1.2: Subsystem Activity Diagram

#### 4.1.2 Specifications

1. The door sensor must detect and notify of the open/closed state of the door within 0.5 seconds of a state change.
   (a) A fast response time ensures quick alerts in emergencies, allowing staff to respond promptly.
   (b) Conduct 50 repeated door open/close tests, measuring time from state change to transmission using serial debug logs.
2. The door sensor must transmit wireless structured messages to the main microcontroller at 915 MHz from a maximum distance of 15 feet, even through walls and obstacles. Each message must contain a unique bathroom ID, current door state, and battery voltage status.
   (a) This range is derived from the largest single-stall bathroom size at the Damien Center (Appendix A). The 915 MHz band is selected for improved penetration through walls.
   (b) Structured messages ensure that each sensor node is uniquely identifiable, allowing staff to respond to the correct bathroom location.
   (c) Test RF communication using an oscilloscope or logic analyzer to verify SPI communication with the RF module.
   (d) Logging debug output to confirm proper formatting and message contents (e.g., bathroom ID, door state).
   (e) Test RF communication by placing the system at incremental distances up to 15 feet, ensuring reliable message transmission through walls and obstacles.
3. The subsystem must operate using a 3.7 V 18650 Li-Ion battery, regulated to 3.3 V using a Pololu S7V8F3 step-up/step-down voltage regulator.
   (a) The 18650 Li-Ion battery provides a stable energy source for long operation.
   (b) The Pololu S7V8F3 ensures a constant 3.3 V supply despite battery voltage fluctuations.
   (c) While the STM32F091RCT6 development board provides a 3 V rail, external peripherals such as the RFM95W RF module require a stable 3.3 V logic level.
   (d) Verify regulated output voltage using an oscilloscope.

#### 4.1.3 Subsystem Interactions

The door sensor subsystem interacts with multiple components within the overall system to allow real-time detection and wireless transmission of door state changes. These interactions are important for determining bathroom occupancy and alerting staff in case of an emergency.

1. Interaction with the Power System
   (a) A 3.7 V 18650 Lithium-Ion battery powers the custom STM32F091-based door sensor PCB and the RFM95W RF module attached.
   (b) A Pololu S7V8F3 Step-Up/Step-Down Voltage Regulator stabilizes the voltage to 3.3 V, ensuring reliable operation even as the battery voltage fluctuates during discharge.
   (c) A TP4056 charging module is connected to the battery, allowing concurrent system operation and charging when a micro-USB is plugged in.
   (d) The door sensor microcontroller periodically checks the battery voltage (check power subsystem) and initiates a low-power warning transmission to prevent unexpected shutdowns.
2. Interaction with the Main Microcontroller
   (a) The main STM32 microcontroller next to the toilet receives RF transmissions from the door sensor subsystem.
   (b) Each transmitted structured RF packet contains the door state (open or close) and a unique bathroom ID.
   (c) The main system must track how long the door remains closed without motion detection to identify if there is a potential emergency.
   (d) If a low battery threshold is reached, the main microcontroller will receive a transmission from the RF module to indicate the sensor battery needs recharging.
3. Interaction between the Door Sensor Microcontroller and the RFM95W RF module
   (a) The STM32F091 microcontroller communicates with the RF module through SPI.
   (b) When a door state change occurs, the STM32 constructs a structured message for the RF module for transmission to the main microcontroller.
   (c) The RF module transmits to the main microcontroller which processes the alert and determines if further action is required.
4. Interaction within the STM32 Door Sensor Microcontroller

(a) The STM32F091 chip reads the state of the reed switch through a GPIO input pin.

(b) The door sensor microcontroller processes the door state and builds a structured RF message.

(c) The RF module transmits the message via SPI.

5. Interactions Between the Reed Switch and Magnet

   (a) The Littelfuse 59140-1-S-02-F is mounted on the door, and the 57140-000 magnet is fixed to the door frame.

   (b) When the door is closed, the magnet aligns with the reed switch, completing the circuit, and causing the GPIO pin to read low.

   (c) When the door is opened, the magnet and the reed switch are separated, causing the GPIO pin to read high.

### 4.1.4 Schematics

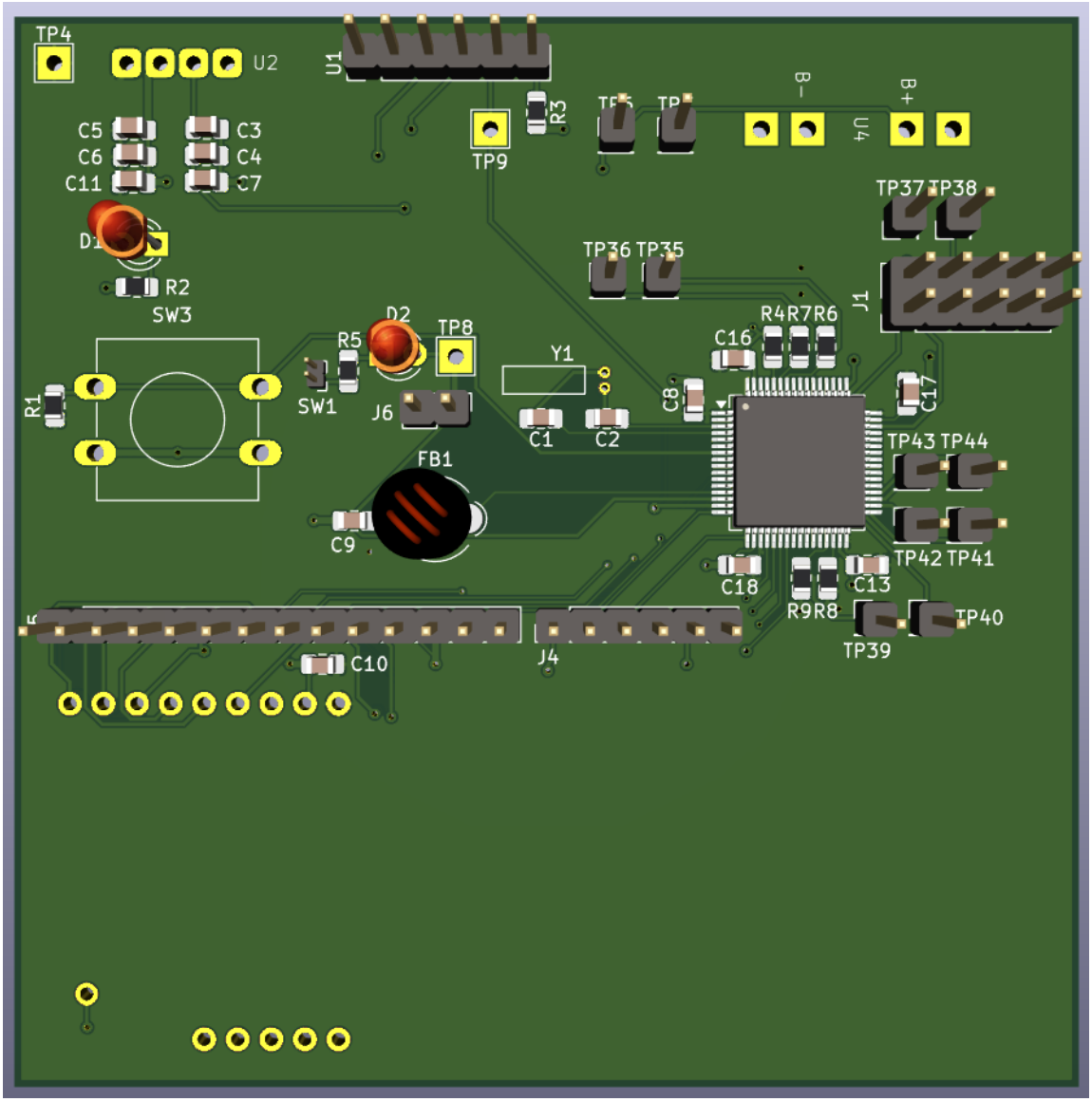


Figure 4.1.3: PCB Design

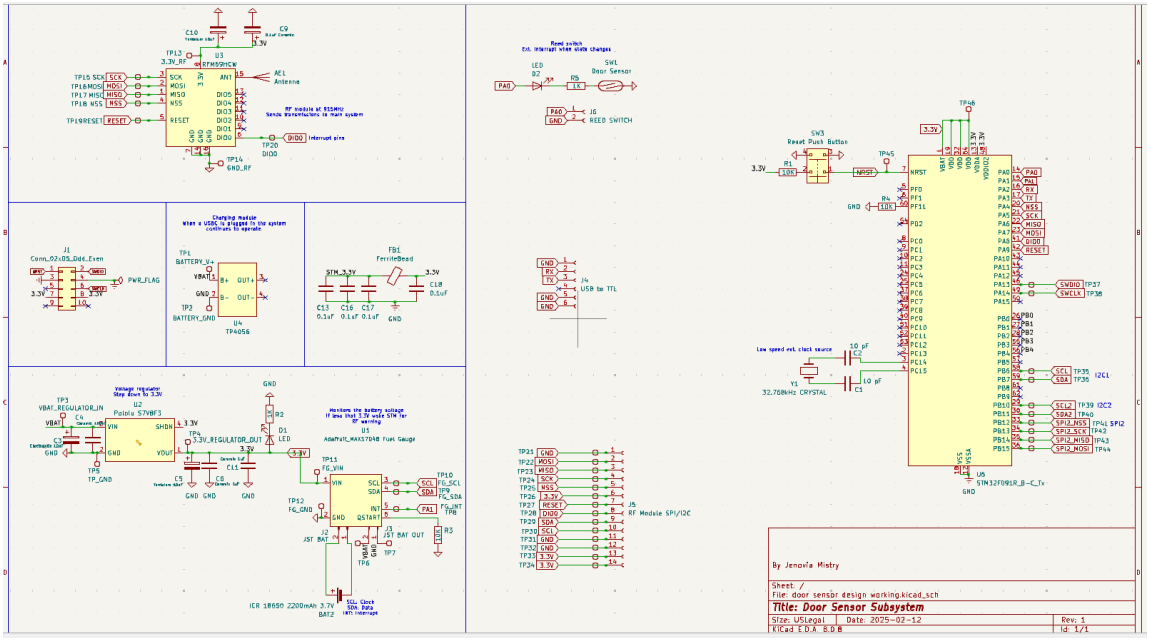


Figure 4.1.4: Schematic

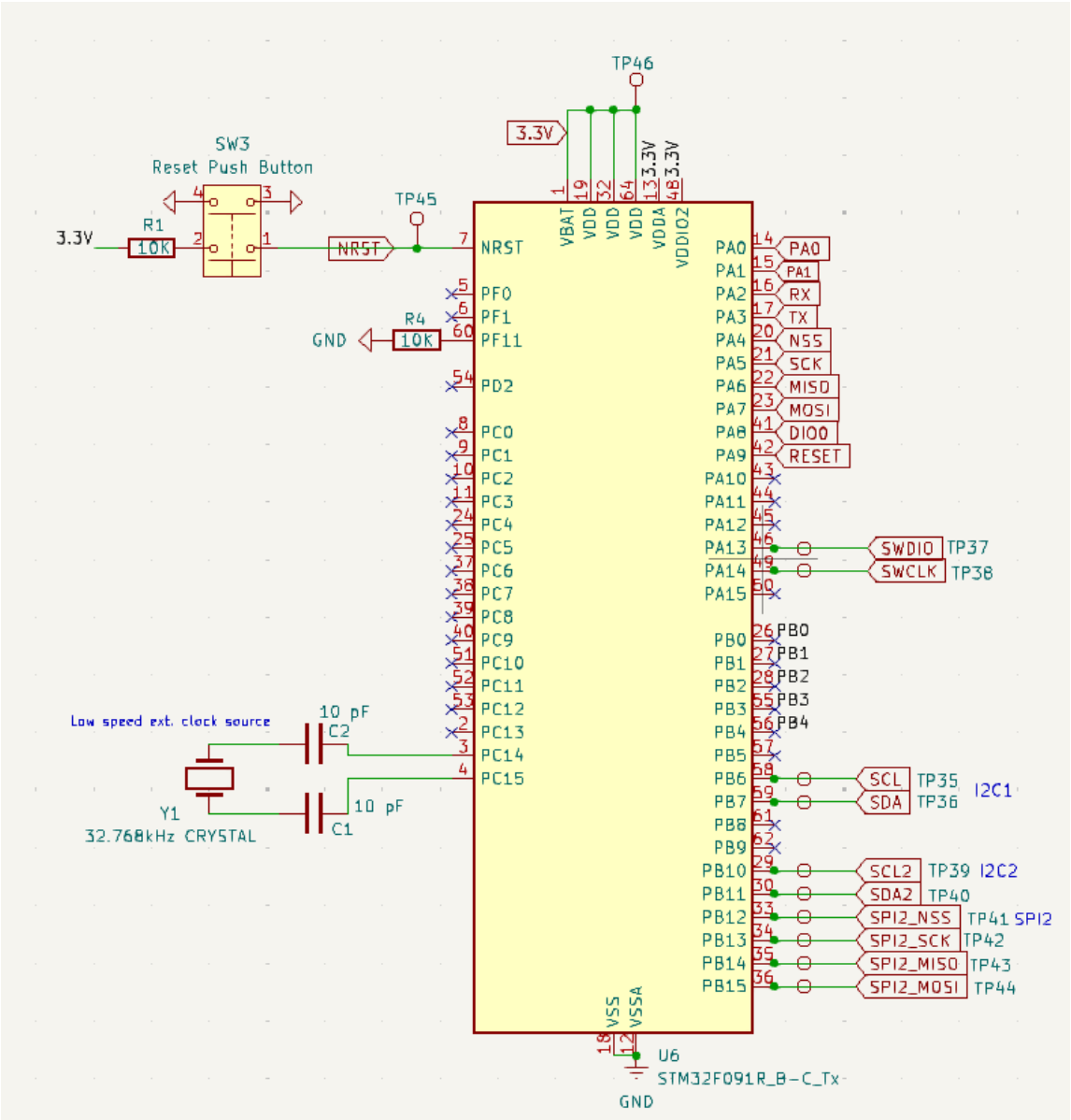


Figure 4.1.5: Microcontroller

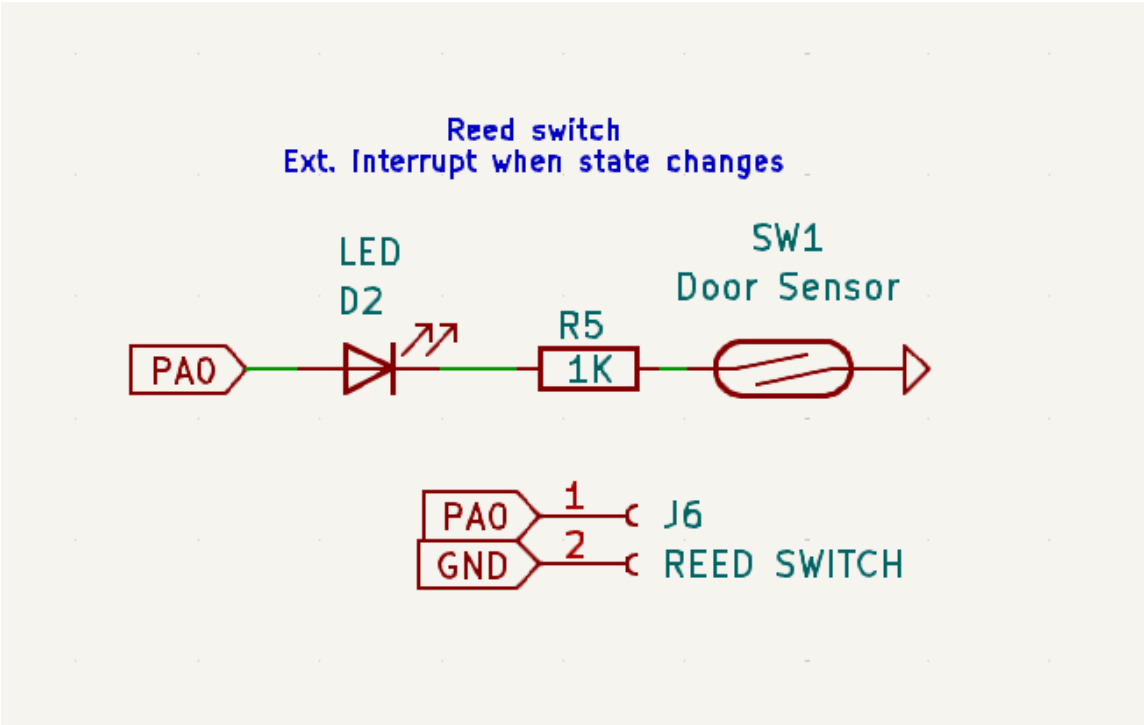


Figure 4.1.6: Reed Switch

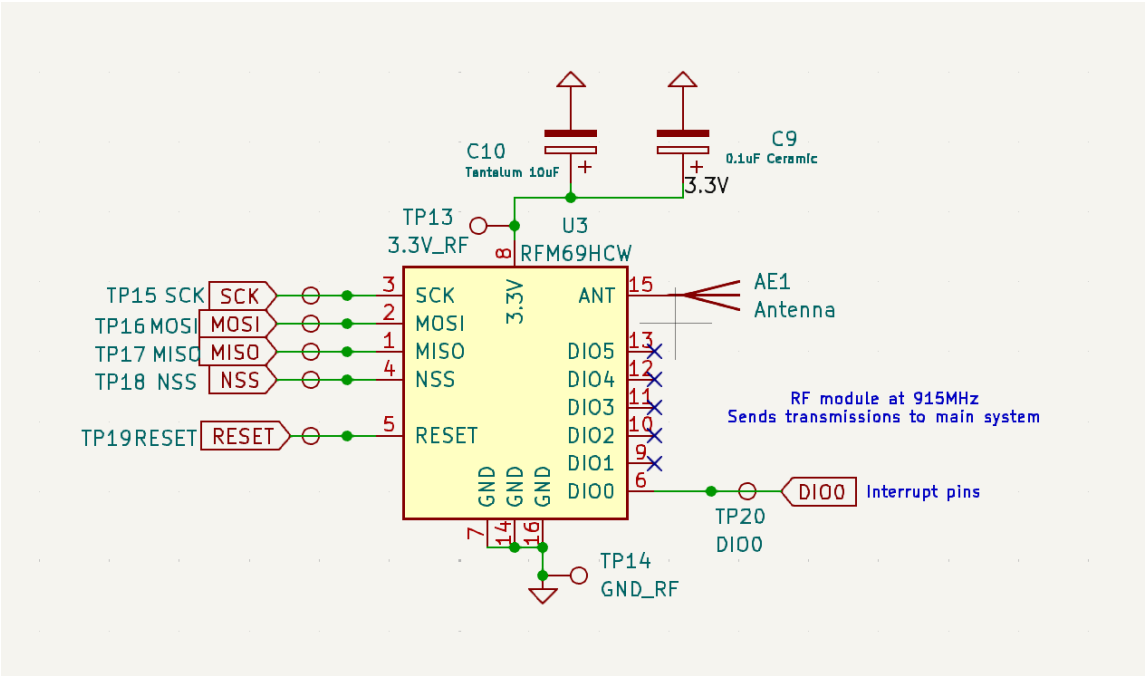


Figure 4.1.7: RF Module

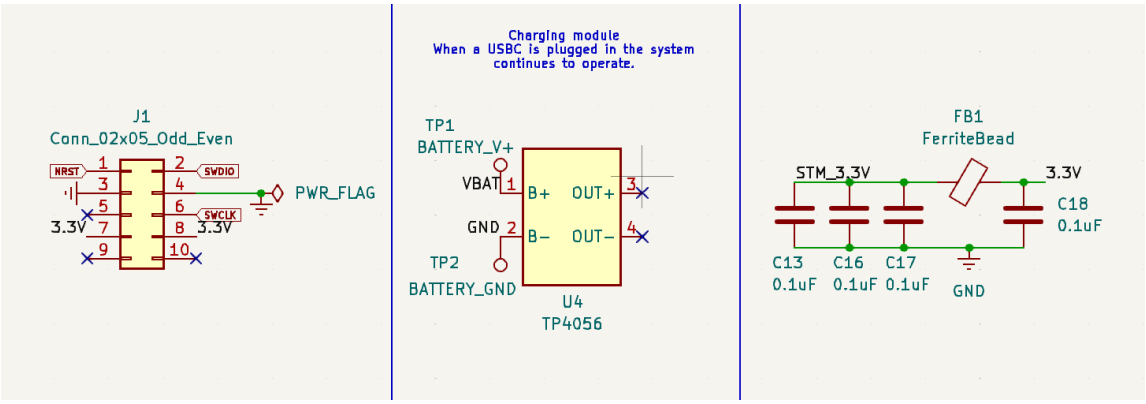


Figure 4.1.8: Program Header, Charging Module, Decoupling

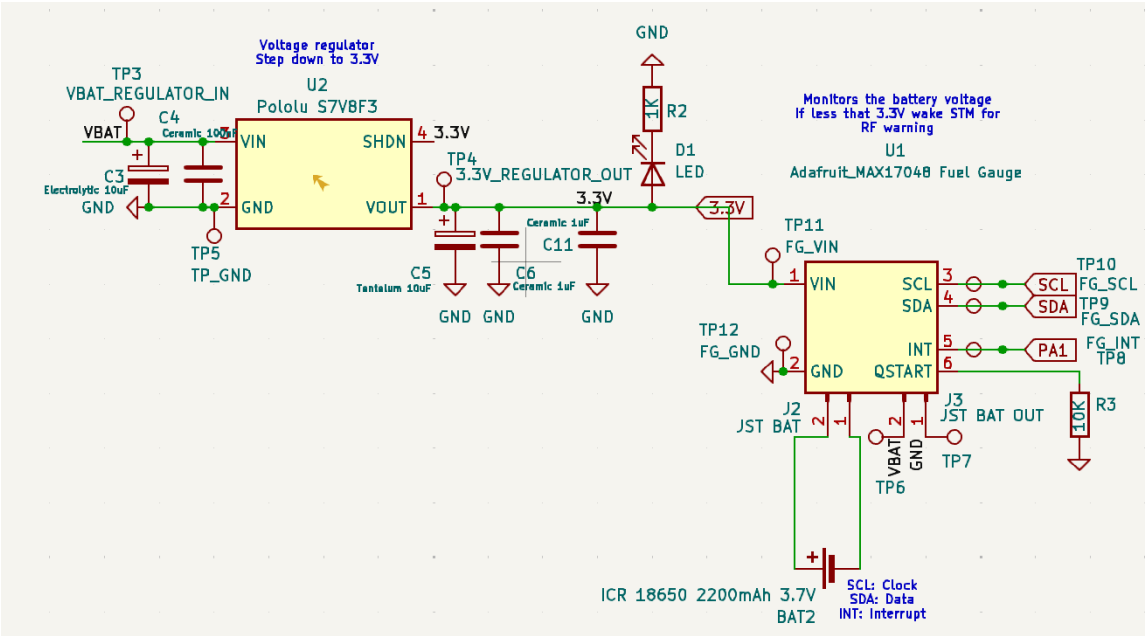


Figure 4.1.9: Voltage Regulator and Battery Monitor

#### 4.1.5 Parts

- Littelfuse 59140-1-S-02-F Reed Switch
  - Detects whether the door is open or closed by responding to the presence of a magnet.
  - Chosen for its pre-soldered wire configuration, making it cleaner to integrate into the system.
  - It is IP67-rated, ensuring moisture-resistance and suitability for a bathroom environment [7].
  - A pressure-based contact switch was considered first, but repeated actuation degrades the contact force over time. The reed switch avoids mechanical wear entirely since the contacts never physically touch during normal door operation.
- Littelfuse 57140-000 Magnet
  - Works alongside the reed switch to indicate the door state. When the magnet moves away from the switch, the door is open; when it aligns, the door is closed.
  - Specifically designed for use with the selected reed switch.
  - Other generic magnet options were considered, but this one is optimized for our reed switch model.
- STM32F091 Microcontroller
  - Detects a change in the door sensor state and transmits the door state and bathroom ID to the main system microcontroller using RF communication.
  - I considered the ESP32 initially, but ruled it out for two reasons: its WiFi radio draws significantly more power, and tying the system to a WiFi network would break if the facility ever relocated. The STM32's lower power profile and network-independence made it the right call for a facility-deployed device.
- RFM95W 915 MHz Transceiver Radio (RF) Module
  - Provides reliable, long-range, encrypted RF communication.
  - Chosen frequency (915 MHz) ensures penetration through walls and reliable communication across multiple floors, based on the Damien center floor plan.
  - Outperforms Bluetooth and Wi-Fi for the range requirements of the Damien Center facility.

#### 4.1.6 Algorithm

1. The system is powered by a 3.7 V Li-ion battery, regulated to 3.3 V with the Pololu 3.3V Voltage Regulator.
2. The STM32F091 microcontroller boots up and performs a power-on reset, initializing necessary peripherals.
3. GPIO and SPI interfaces are initialized:
   (a) The Littelfuse 59140-1-S-02-F reed switch connects directly to a GPIO input pin for door state monitoring.
   (b) The SPI interface is configured for communication with the RFM95W transceiver module.
   (c) The microcontroller accurately measures battery voltage and state of charge.
4. If the voltage drops below 3.3 V (low battery threshold): (see power subsystem)
   (a) The microcontroller sends a structured low-battery warning message containing the bathroom ID via SPI to the RFM95W RF module.
5. If the battery voltage is above the threshold, normal system operation continues.
6. If a USB-C cable is plugged into the TP4056 Lithium Battery Charging Board, the battery recharges while the system remains operational.
7. The system continuously monitors the reed switch for reed switch state changes through a GPIO pin.
8. If no state change is detected, the system remains idle, continuously ready to detect state changes.
9. Upon a door state change, a debounce delay of 50 ms is applied to ensure that the switch state is stable.
10. After the debounce delay, the microcontroller reads the GPIO state again to confirm it is stable.
    (a) If the reed switch is closed (door is closed, magnet and switch align), the GPIO pin reads LOW.
    (b) If the reed switch is open (door is open, magnet and switch are separated), the GPIO pin reads HIGH.
11. A structured message with the door ID and state is sent via SPI to the RFM95W RF module.

12. The RF module transmits the structured message wirelessly to the main STM32 microcontroller near the toilet.
13. The main STM32 microcontroller receives the RF transmission and sends an acknowledgment.
14. If no acknowledgment is received, the message is retransmitted up to 3 times.

#### 4.1.7 Theory of Operation

The door sensor subsystem is designed to reliably detect the open/closed state of a bathroom door and communicate this information—along with battery status and a unique bathroom ID—to a main microcontroller using RF communication. The operation of the subsystem can be broken down into several key processes:

1. Door Sensing and Signal Generation
   (a) Our door sensor uses a magnetic reed switch mechanism with a specific logic configuration.
   (b) Closed State (Door Closed): When the door is closed, a magnet on the door is connected with the reed switch. In this state, the magnetic field causes the reed switch contacts to close, resulting in a low logic level on the sensor output.
   (c) Open State (Door Open): When the door opens, the magnet moves away from the reed switch. The absence of the magnetic field causes the contacts to open, and the output is pulled to a high logic level. This high signal is interpreted by the microcontroller as an "open door" condition.
2. Signal Integration and Processing
   (a) The digital output from the reed switch is connected to a dedicated GPIO pin on the microcontroller. The system continuously monitors this input using polling.
   (b) Debouncing: To avoid false transitions due to mechanical bouncing when the door moves, the system uses software debouncing to ensure that only stable state changes are registered.
   (c) Logical Thresholds: The microcontroller interprets a high logic level as an indication that the door is open and a low logic level as closed. This information is then used with data from other subsystems (such as the motion sensor) to determine whether an emergency is occurring.
3. Message Construction
   (a) When a door state change is detected (or during periodic battery checks), the microcontroller constructs a structured message that includes the bathroom ID and the current door state.
4. Wireless Communication and Data Transmission
   (a) RF Communication
      i. The constructed message is sent to an RFM95W 915 MHz transceiver via SPI. This RF module is selected for its robust transmission capabilities over a 15-foot range, ensuring reliable communication even through walls.

(b) Data Reception

i. The RF module transmits the message to the main STM32 microcontroller, which is responsible for receiving and processing alerts from various bathroom units. Retransmission logic is implemented such that if an acknowledgment is not received, the message will be resent up to three times.

5. System Coordination and Reliability

(a) Subsystem Interactions

i. The overall operation of the door sensor subsystem relies on interactions between its components. The microcontroller uses the inputs from the reed switch constructs data packets, and commands the RF module to transmit these packets.

(b) Testing and Verification

i. Repeated door open/close tests confirm that state changes are detected and transmitted within 0.5 seconds.

ii. RF communication tests ensure that messages are reliably sent up to the required range.

iii. Voltage regulation tests are conducted using a multimeter and logged debug data.

6. Troubleshooting and Maintenance

(a) Signal Verification: Can verify correct operation by testing the reed switch's output with a multimeter. A low voltage should be observed when the door is closed, and a high voltage when the door is open.

(b) Debounce and Logic Checks: If inconsistencies in door status detection occur, the debouncing algorithm and the logic thresholds in the microcontroller should be reviewed.

#### 4.1.8 Specifications Measurement

1. **The door sensor must detect and notify of the open/closed state of the door within 0.5 seconds of a state change.**

   a. **Explanation:**
   - A fast response time ensures that staff are promptly alerted to changes in door state, which is important in emergency scenarios.
   - This specification measures the total system time between the door event via the reed switch and the logging of the updated state via UART debug output.

   b. **Measurement:**
   - A series of open and close events were simulated with the reed switch and magnet while the system was powered from the regulated 3.3 V supply.
   - The reed switch GPIO signal was probed using an oscilloscope to verify the edge detection timing.
   - Figure 4.1.10 shows a transition from HIGH to LOW (door closing event), with cursors placed on transitions, showing a total time of **118 ms** between state changes.
   - This time is within the 0.5 second response window required by the specification.
   - UART debug output (Figure 4.1.11) confirms that the system detects and logs door state changes in real time.
   - This functionality was verified on the final assembled PCB and meets the required performance criteria.

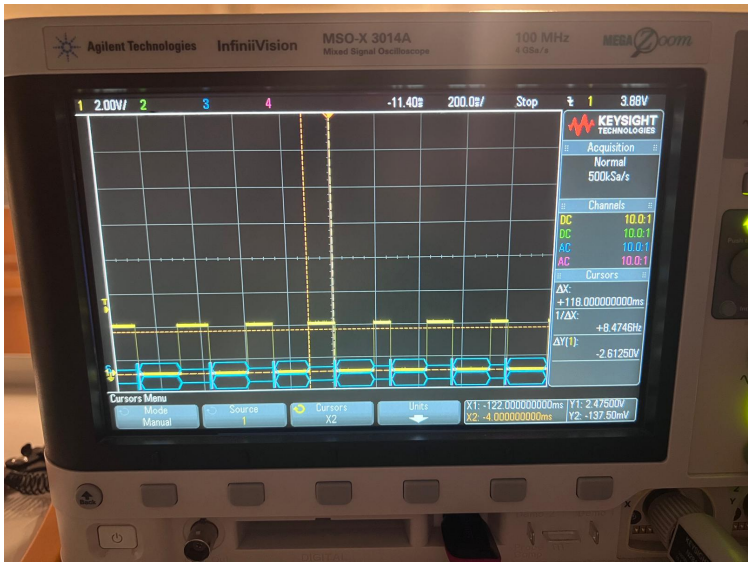


Figure 4.1.10: Oscilloscope capture shows the GPIO signal from the reed switch during repeated open/close events. Cursors show 118 ms between transitions.

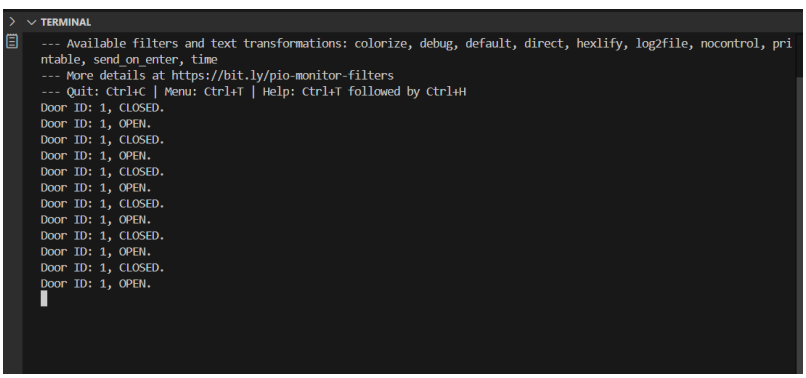


Figure 4.1.11: UART debug output shows logging of door open/close events following GPIO transitions.

2. **The door sensor must transmit wireless structured messages to the main microcontroller at 915 MHz from a maximum distance of 15 feet, even through walls and obstacles. Each message must contain a unique bathroom ID and the current door state.**

   a. **Explanation:**
   - The 915 MHz frequency enables signal transmission through bathroom walls

and improves reliability in such environments.
- Structured messages that include a unique ID and door state ensure the receiver can identify the correct sensor and act accordingly.
- Verification of message format, register communication, and signal quality is necessary to demonstrate the RF subsystem functionality.

b. **Measurement:**
- The RF module was tested by repeatedly sending structured packets triggered by door state changes.
- UART debug output confirms that each door open/close event results in a packet transmission, as shown in Figure 4.1.12 and Figure 4.1.13.
- Figure 4.1.14 shows that the RF module receives stable power at its VIN pin and is enabled (the EN line is pulled high).
- Register SPI read/write communication was validated with oscilloscope captures:

  - Figure 4.1.15 shows SPI SCK activity when a reed-triggered packet is sent.
  - Figure 4.1.16 shows MISO transitions (with cursors for timing) during a packet send.
  - Figure 4.1.17 captures MOSI sending a reed switch-triggered packet, with cursor timing.
  - Figure 4.1.18 shows the NSS (chip select) line toggling normally for SPI control. The line goes from high to low at the start of a transmission, and returns to high when the transmission is done.
  - Figure 4.1.19 verifies the RF module is reset correctly during initialization. The signal goes low during system startup, and returns high for the system to continue operation.
  - Figure 4.1.20 shows activity on the DIO0 line during each transmission attempt. It shows that the RF module acknowledges the request and enters transmit mode.

- Based on the Adafruit RFM95W datasheet [1], all SPI waveform behavior and register responses align with the correct operation of the RFM9x transceiver.
- These results confirm reliable communication and packet handling on the final door sensor PCB.
- The firmware responsible for SPI communication and packet formatting is available on GitHub: `https://github.com/stephclose/Bathroom-Emergency-Detection/tree/main/bareMetal/doorSensor`.

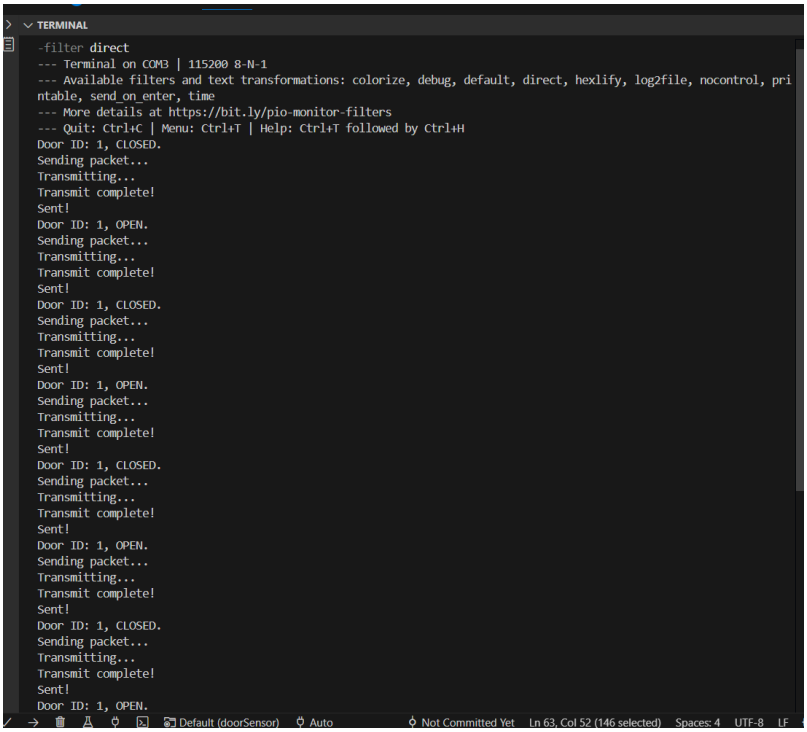


Figure 4.1.12: UART debug output logs structured packet transmissions from each door state change.

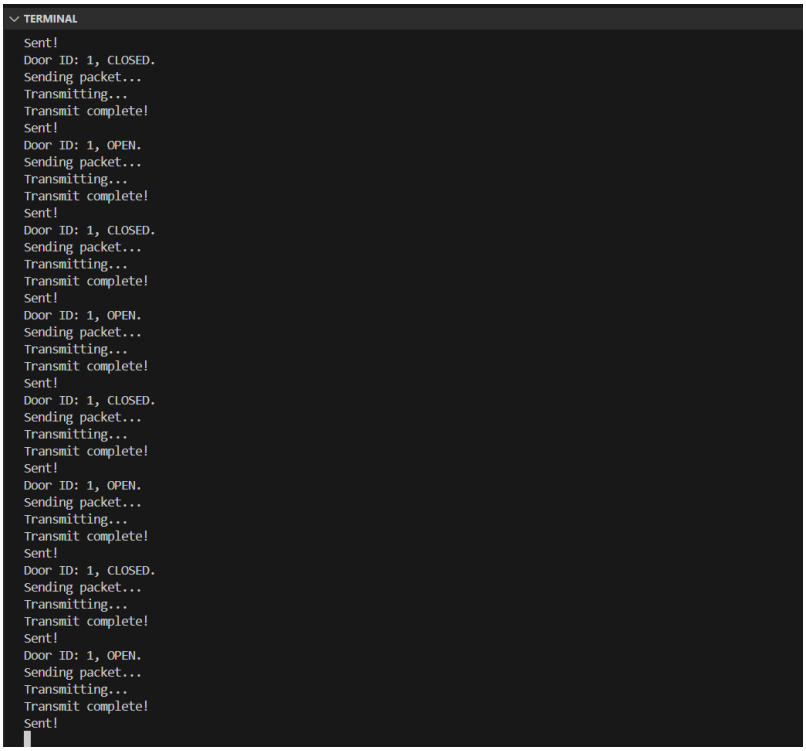


Figure 4.1.13: Additional UART logs confirming structured message transmissions.

Figure 4.1.14: VIN and EN lines confirm the RF module is powered and enabled. Cursors show 3.2 V

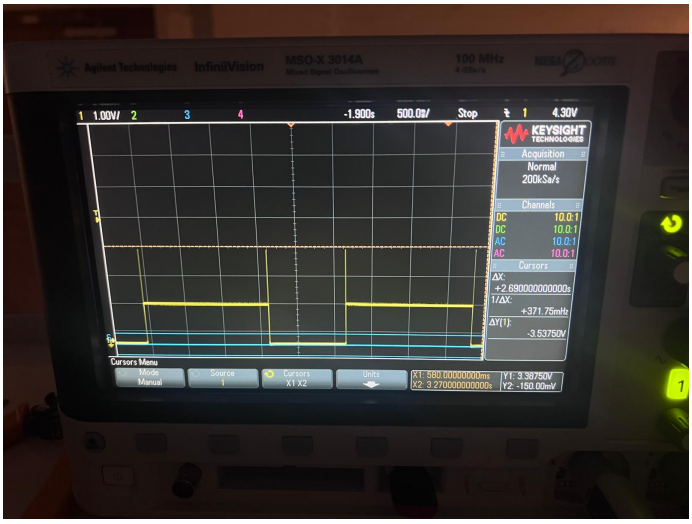


Figure 4.1.15: SPI clock (SCK) transitions during packet transmission triggered by reed switch.

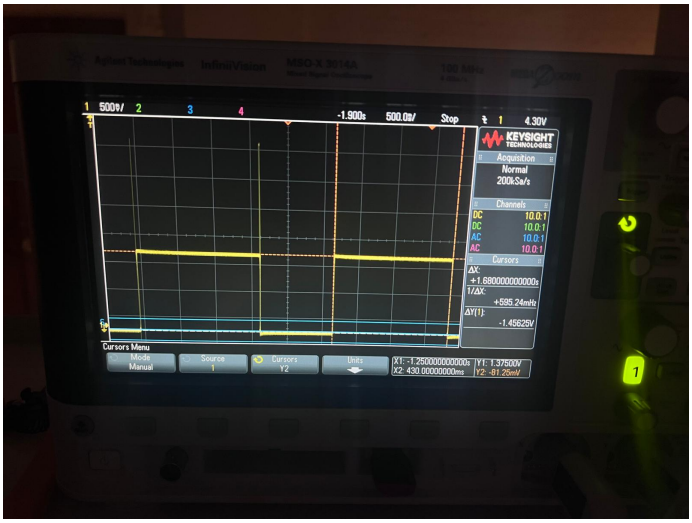


Figure 4.1.16: SPI MISO response confirming data reception from RF module.

Figure 4.1.17: SPI MOSI signal showing data transmission of structured packet.

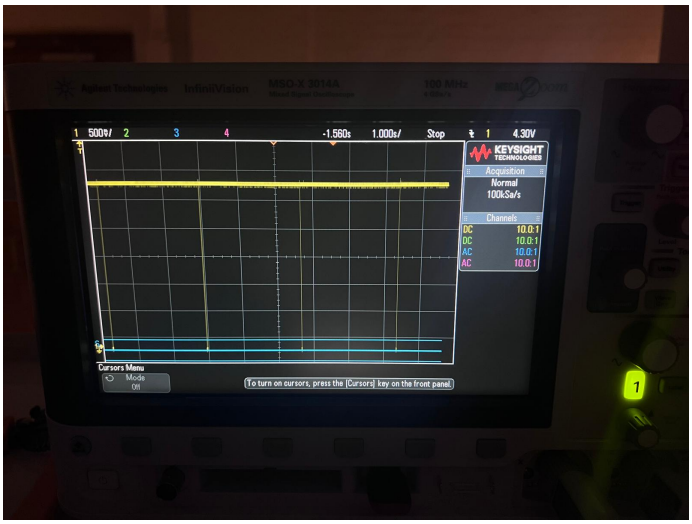


Figure 4.1.18: NSS line toggling demonstrates SPI control for each transaction.

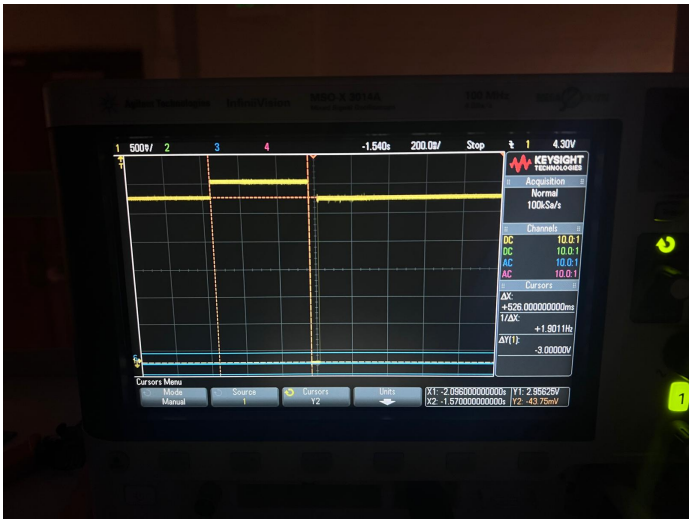


Figure 4.1.19: Reset signal to the RF module during system initialization.

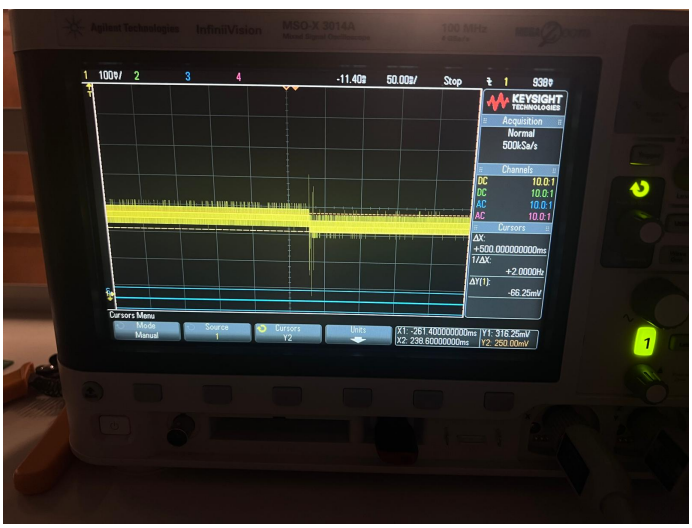


Figure 4.1.20: DIO0 line shows toggling behavior with transmission events.

3. **The subsystem must operate using a 3.7 V 18650 Li-Ion battery, regulated to 3.3 V using a Pololu S7V8F3 step-up/step-down voltage regulator.**

   a. **Explanation:**
   - The 3.3 V output ensures a stable supply for the STM32F091 microcontroller and RF module.

- The Pololu S7V8F3 was selected for its ability to maintain this voltage across varying battery levels.

b. **Measurement:**
- A 3.7 V 18650 Li-Ion battery was connected to the regulator input.
- The VOUT pin was probed using an oscilloscope via test point 4 on the custom PCB.
- Figure 4.1.21, with cursors, shows that the regulator output centers around 3.3 V.
- Additional validation was performed using a digital multimeter: all STM32F091 VDD voltage pins were individually measured and confirmed to receive approximately 3.3 V.
- The door sensor subsystem functions reliably as expected, further verifying that the PCB power delivery and regulation are operating correctly.

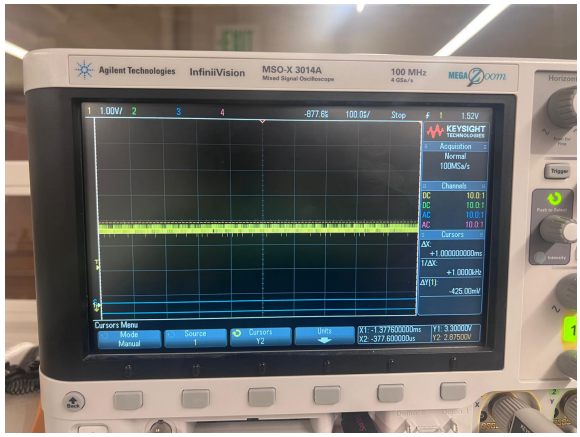


Figure 4.1.21: Oscilloscope capture showing the 3.3 V output of the Pololu S7V8F3 regulator.

4. **The final assembled door sensor PCB, which was used to validate that all subsystem specifications were successfully met, is shown in Figure 4.1.22**.

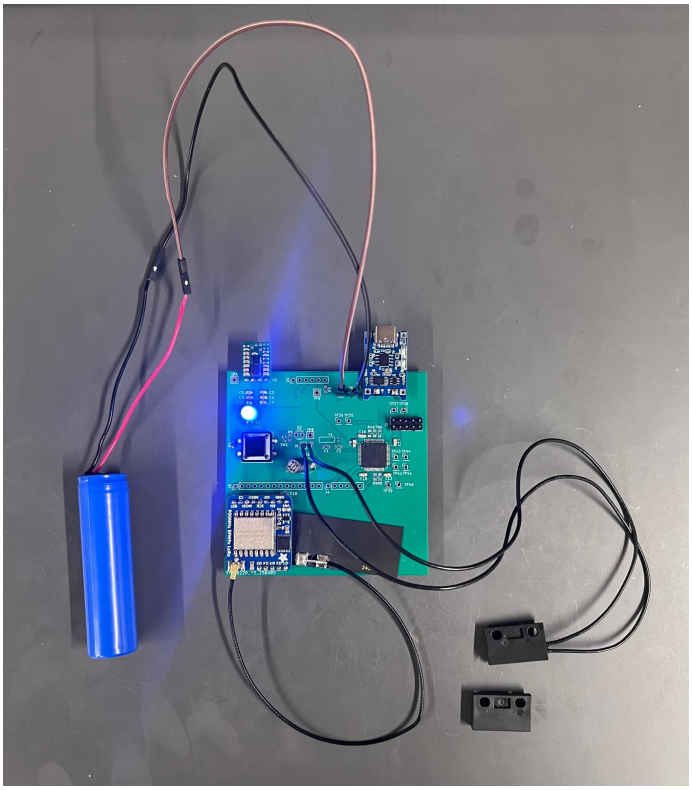

Figure 4.1.22: Photograph of the fully assembled and functional door sensor PCB, including the STM32 microcontroller, RF module, voltage regulator, and reed switch interface. This board was used to validate all subsystem specifications.

# 5 Bibliography

## References


[1] Adafruit Industries, "Adafruit RFM95W LoRa Radio Transceiver Breakout – 868 or 915 MHz," Adafruit, https://www.adafruit.com/product/3072 (accessed Apr. 28, 2025).

[2] Federal Communications Commission (FCC), "Part 15—Radio Frequency Devices," Title 47, Code of Federal Regulations, https://www.ecfr.gov/current/title-47/chapter-I/subchapter-A/part-15 (accessed Feb. 2, 2025).

[3] IEEE Standards Association, "IEEE Standard for Rechargeable Batteries for Multi-Cell Mobile Computing Devices," IEEE Std 1625-2008, https://ieeexplore.ieee.org/document/4657368 (accessed Feb. 2, 2025).

[4] IEEE Standard for Low-Rate Wireless Networks, IEEE Std 802.15.4-2020, IEEE, https://standards.ieee.org/ieee/802.15.4/7029/ (accessed Feb. 2, 2025).

[5] Littelfuse Inc., "59140-1-S-02-F Reed Sensor Datasheet," Littelfuse, https://www.digikey.com/en/products/detail/littelfuse-inc/59140-1-S-02-F/4779928 (accessed Feb. 2, 2025).

[6] Littelfuse Inc., "57140-000 Magnet Datasheet," Littelfuse, https://www.digikey.com/en/products/detail/littelfuse-inc/57140-000/43978 (accessed Feb. 2, 2025).

[7] National Electrical Manufacturers Association (NEMA), "ANSI/IEC 60529-2020 — Degrees of Protection Provided by Enclosures (IP Code)," https://www.nema.org/docs/default-source/about-us-document-library/ansi-iec_60529-2020-contents-and-scopef0908377-f8db-4395-8aaa-97331d276fef.pdf (accessed Feb. 2, 2025).

[8] Pololu, "3.3V Step-Up/Step-Down Voltage Regulator S7V8F3," Pololu, https://www.pololu.com/product/2122 (accessed Feb. 2, 2025).

[9] Semtech, "SX1276/77/78/79 — LoRa Transceiver Datasheet," Semtech Corporation, https://www.semtech.com/products/wireless-rf/lora-transceivers/sx1276 (accessed Feb. 1, 2025).

[10] STMicroelectronics, "STM32F091RC Microcontroller Datasheet," STMicroelectronics, https://www.st.com/en/microcontrollers-microprocessors/stm32f091rc.html (accessed Feb. 2, 2025).

[11] "TP4056 Datasheet: 1A Standalone Linear Lithium Battery Charger," https://datasheet.lcsc.com (accessed Feb. 1, 2025).

[12] U.S. Department of Health and Human Services, "Health Insurance Portability and Accountability Act of 1996," https://www.hhs.gov/hipaa/index.html (accessed Feb. 1, 2025).

# 6 Appendices

## 6.1 Appendix A: Existing Plans

This appendix contains the Damien Center's existing floor plan, which was used to determine system requirements such as RF communication range and bathroom sensor placement.

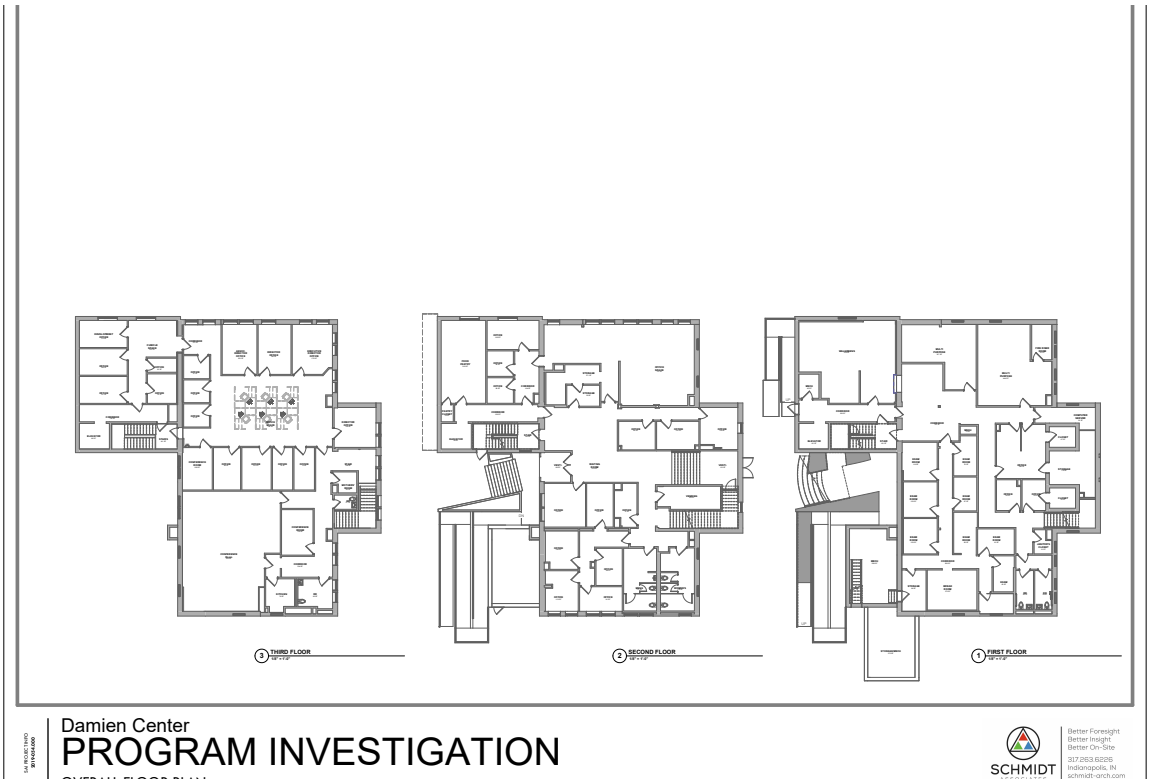


Figure 6.1.1: Damien Center Floor Plan